ALL TRANSISTOR CAR RADIO

MATSUSHITA

MODEL CR-1352(AT-352)

SERVICE NOTE

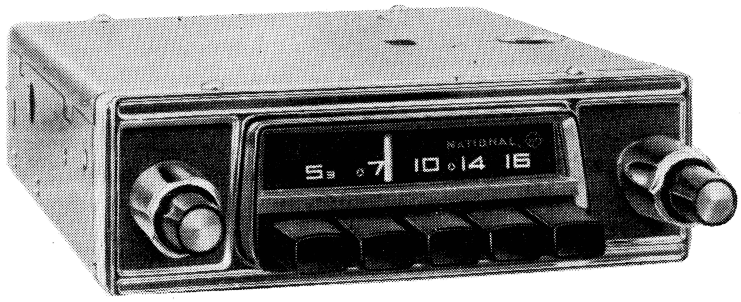

SPECIFICATIONS

CIRCUIT SYSTEM

Superheterodyne with a RF amplification, manual and push button tuning, 7 transistors.

TUNING RANGE ·····535−1,605Kc

INTERMEDIATE FREQUENCY ·····455Kc

SENSITIVITY ·····20μV (at the output of 50mW)

SELECTIVITY ·····18 dB (at ±10Kc)

FIDELITY

	High	Low
100%	−4 dB	−4 dB
400%	0 dB	0 dB
2000%	———	−10 dB
4000%	−15 dB	———

POWER OUTPUT

Undistorted	1.0W	at	6V	battery voltage
	1.5W	at	12V	battery voltage
Maximum	1.5W	at	6V	battery voltage
	2.5W	at	12V	battery voltage

POWER SUPPLY ·····6V or 12V

This equipment may be used in European automobiles (especially German) and can be operated on either 6V or 12V power; power supply polarity can also be changed.

POWER CONSUMPTION ·····

with 6V approximately 8.3W (6.6V×1.25A)

with 12V approximately 10.5W (13.2V×0.78A)

ANTENNA INPUT CONDITIONS

The trimmer provided gives adjustment for a range of total input capacity from 80mmf−100mmf.

TRANSISTOR COMPLEMENT

(1) Type 2SA102 ·····RF Amp.
(2) Type 2SA103 ·····Converter
(3) Type 2SA102 ·····1st IF Amp.
(4) Type 2SA102 ·····2nd IF Amp.
(5) Type 2SB173 ·····AF Amp.
(6) Type 2SB172 ·····Audio Driver
(7) Type 2SB126A ·····Power Amp.

A diode is used as detector and AGC.

LOUDSPEAKER

Size and type ·····160mm(6½")P.M.

Voice coil impedance ·····8Ω

DIMENSIONS (Receiver)

Width	160mm	(6½")
Height	48mm	(2")
Depth	166mm	(6½")
Distance between the shafts	130mm	(5")
Shaft thickness	maximum 6mm	(¼")

WEIGHT

Receiver ····· approximately 2.0Kg (4.4 lb)

Loudspeaker ····· approximately 1.3Kg (2.8 lb)

MATSUSHITA COMMUNICATION INDUSTRIAL CO., LTD.
TSUNASHIMA YOKOHAMA JAPAN

1. CONSTRUCTION

1−1 Receiver

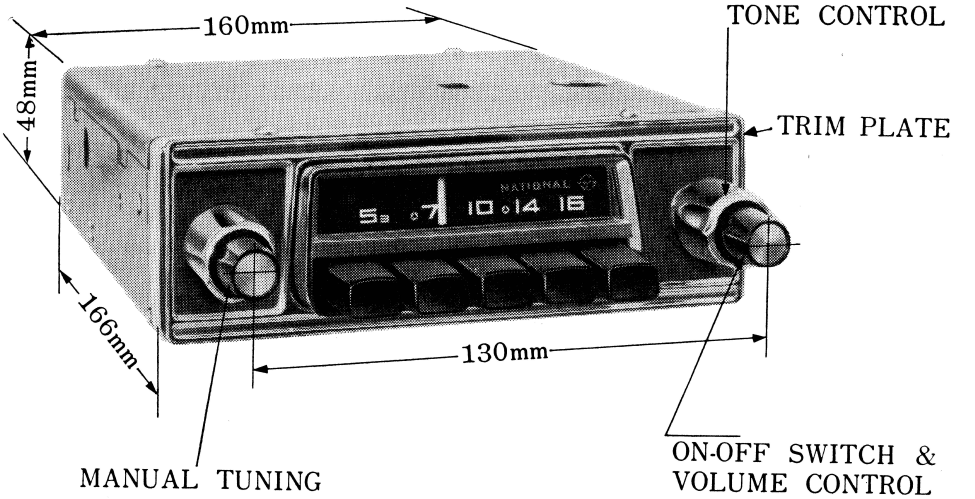

Fg. 1−1

1−2 Loudspeaker

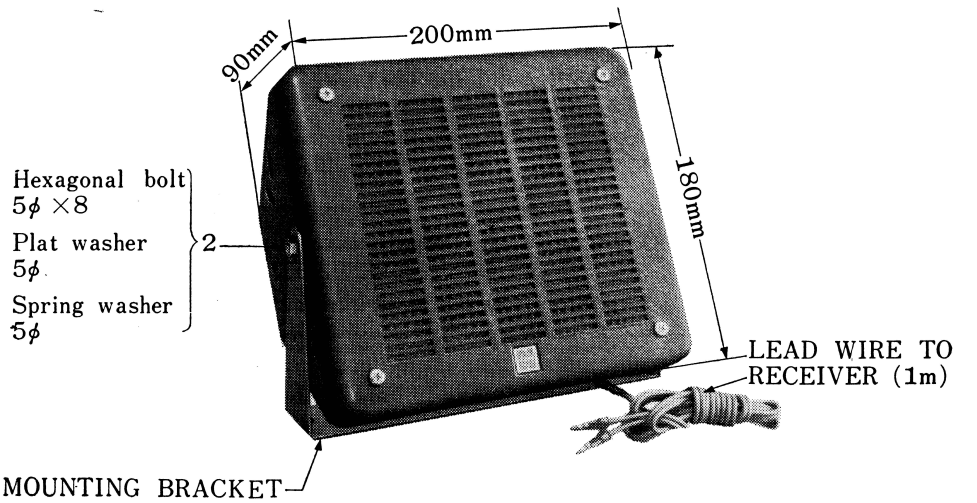

Fig. 1−2

1－3 Accessory parts

Number	Items	Ratings	Quantity
1	Noise suppressor resistor	S-type ANRS-10	1
2	〃 〃	L-type ANRL-10	8
3	Noise suppressor condenser	MPTMBA$_2$ HW504M	2
4	Hexagonal bolt	5mmφ × 30mm	4
5	〃	5mmφ × 15mm	1
6	〃	5mmφ × 8mm	5
7	Hexagonal nut	5mmφ	5
8	Plate washer	5mmφ	15
9	Spring washer	5mmφ	10
10	Spacer 006		2
11	〃 007		2
12	Mounting bracket	Left	1
13	〃	Right	1
14	Mounting strap		1
15	Instruction book & spare fuse	1.5A	one

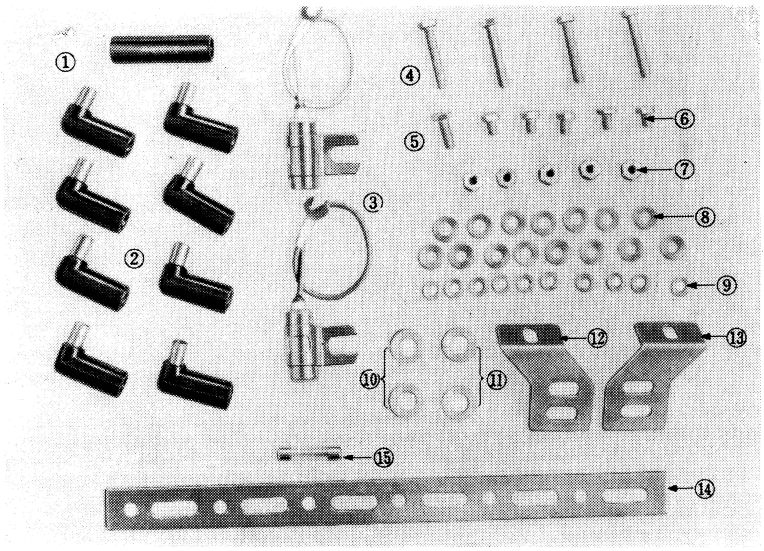

Fig. 1－3

2. PARTS LOCATION

2−1 Receiver (the upper side)

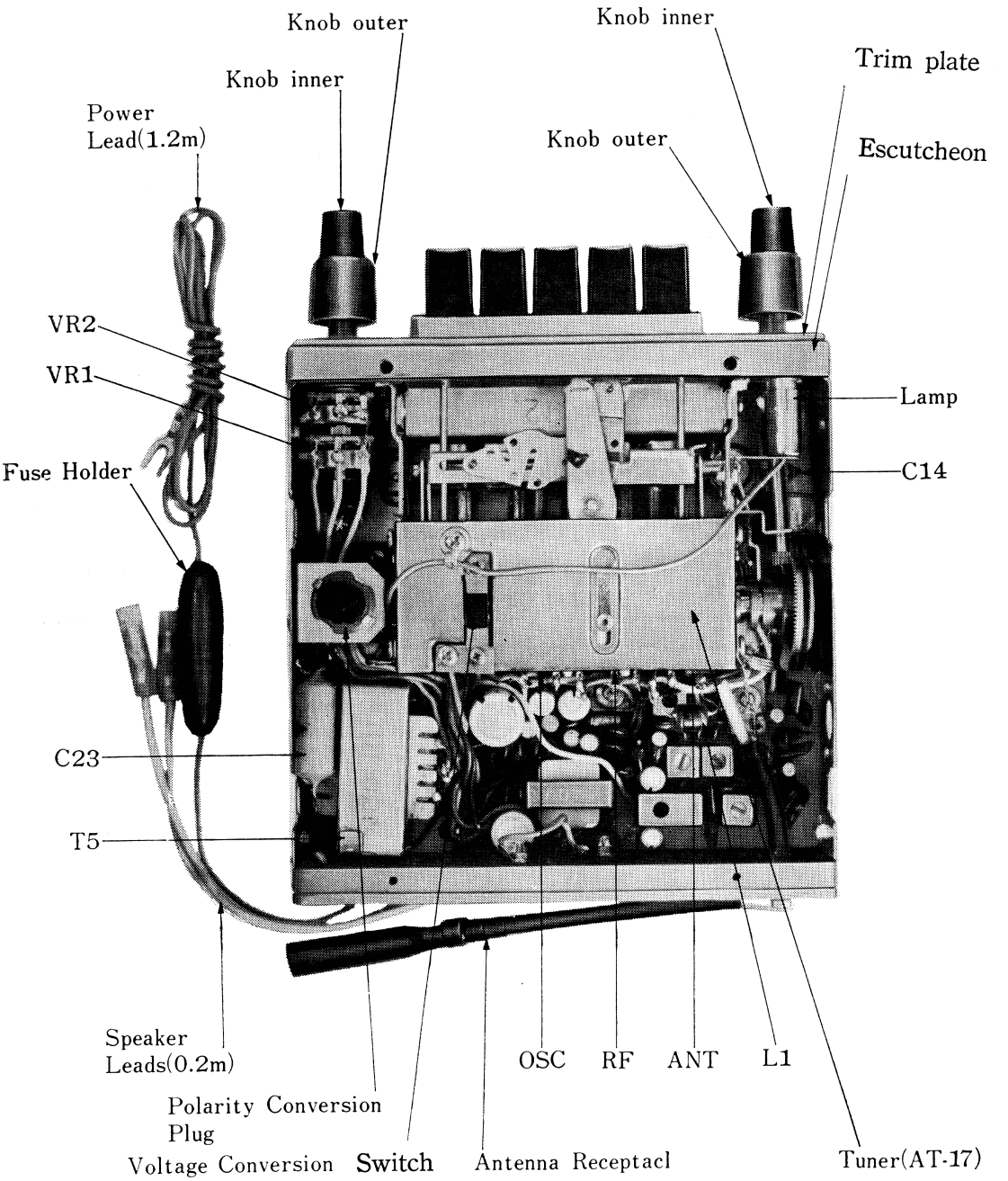

Fig. 2−1

2−2 Printed Circuit Board (P-352B)

Resistor (R)	Transistor (TR)
Capacitor (C)	Capacitor & Resistor (CR)
Coil (L)	Trimmer (TC)
Transformer (T)	Thermistor (Th)

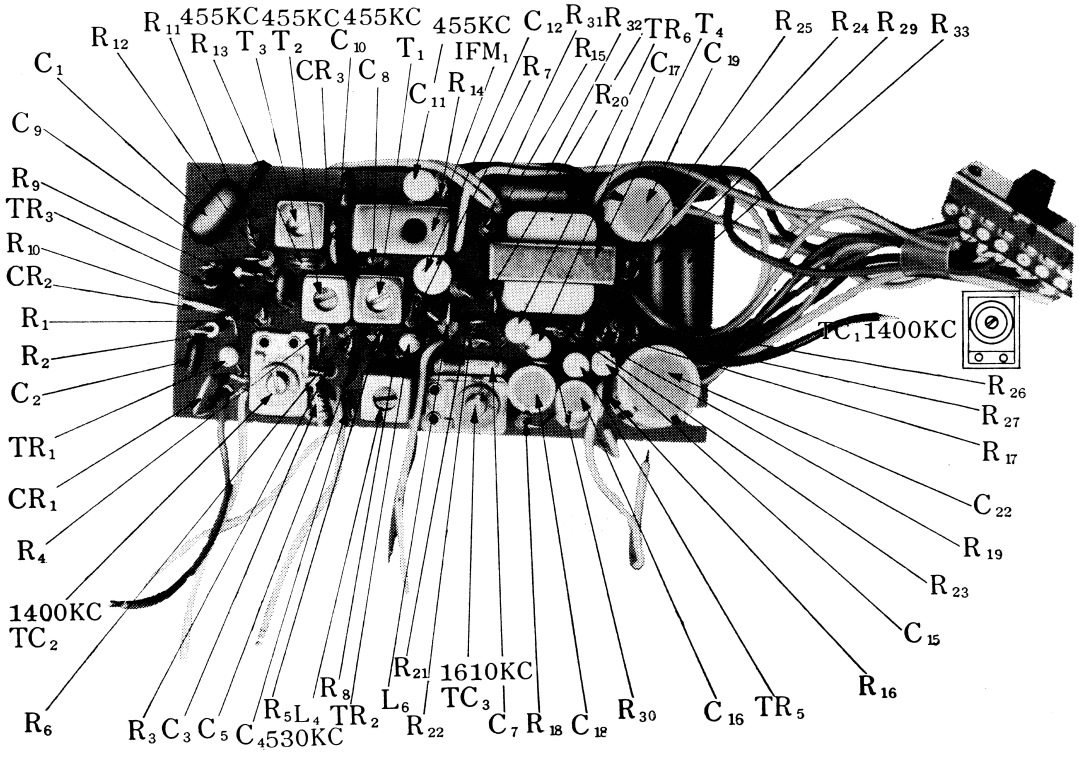

Fig. 2−2

2−3 Printed Circuit Board (P−351D)

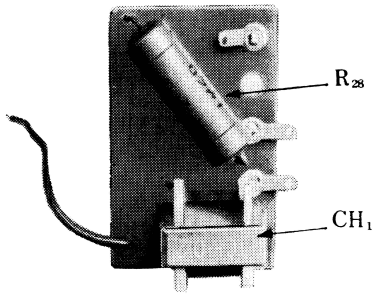

Fig. 2−3

3. VOLTAGE CONVERSION

The conversion switch is located on the upper of the lid.

1. 6V circuit: Fig. 3-1
   Set it at 6V mark.
2. 12V circuit: Fig. 3-2
   Set it at 12V mark.

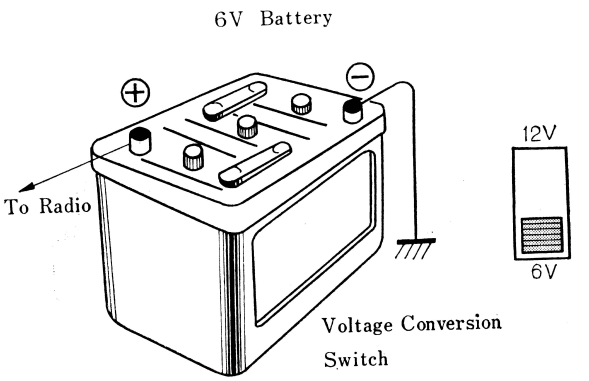

Fig. 3 – 1

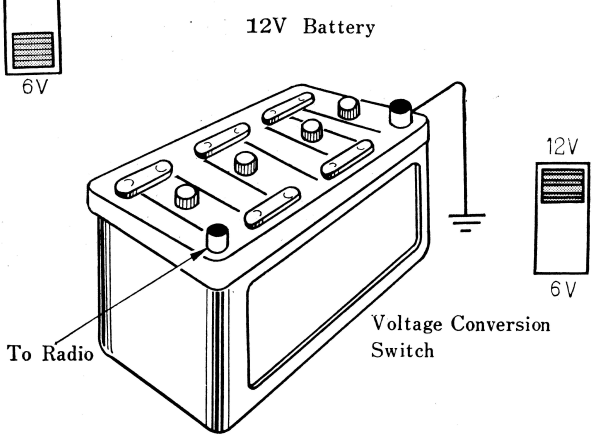

Fig. 3 – 2

4. POLARITY CONVERSION

The conversion plug is located next to the voltage conversion switch.

1. Negative battery terminal grounded: Fig. 4 – 1
   Conversion plug should be inserted so that arrow faces— (NEG.)
2. Positive battery terminal grounded: Fig. 4 – 2
   Conversion plug should be inserted so that arrow faces + (POS.)

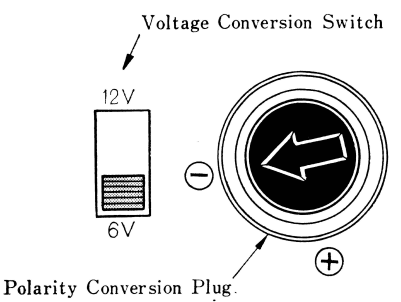

Fig. 4 – 1

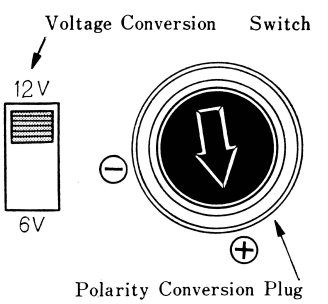

Fig. 4 – 2

Note: All equipment is shipped with voltage and polarity conversion set at 12V—.

5. EXPLANATION CONCERNING POWER AND VOLTAGE CONVERSION CIRCUITS

1. Outline of Conversion Circuits

In this equipment, bias circuit for varying base bias voltage and the impedance of the output transformer are changed in order that the power amplification can be performed by either 6V or 12V. Circuits for stages before the power amplification are established so that they operate only when 6V is employed; when 12V is applied, the voltage is reduced to 6V before supplied to these stages. Conversion circuits do not affect parts other than referred to above.

2. In case 12V is employed

In case of high frequency, power supply voltage of 12V is reduced to 6V by R26 (330Ω). R24 (470Ω) is a voltage stabilizing resistor. Base bias of the power amplification stage is applied R28 (120Ω) and R25 (10Ω). Voltage of approximately 1.1V is applied to the base, and a collector current of approximately 450mA will flow. Output of the collector is supplied to 30Ω terminals of the output transformer. (Refer to Fig. 5−1)

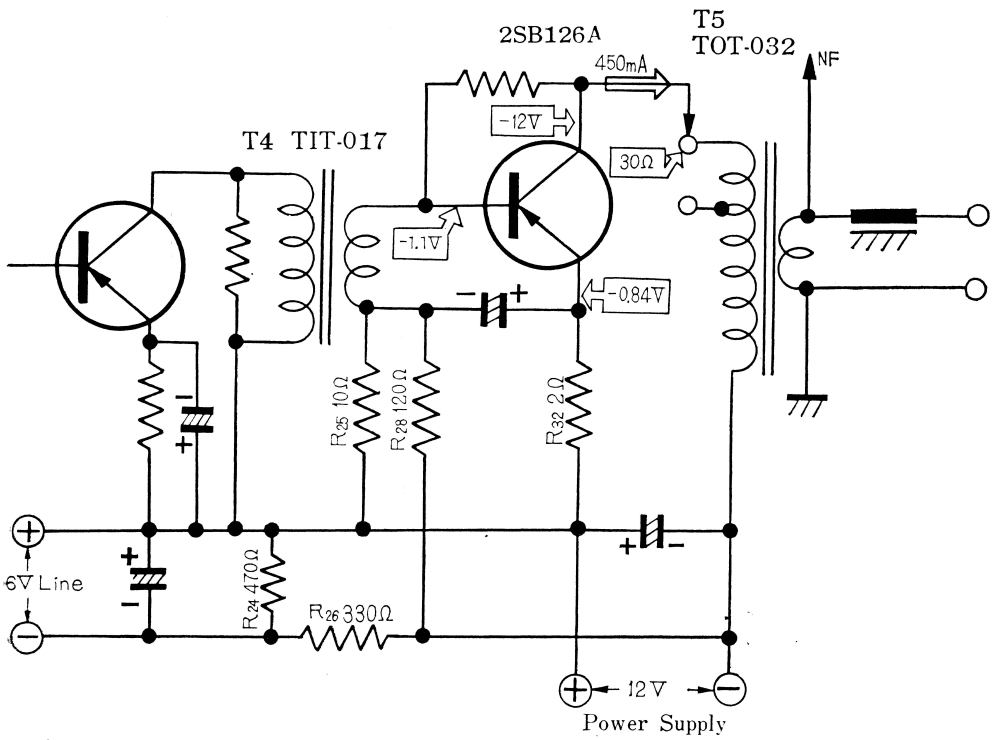

Fig. 5−1

3. In case 6V is employed

R27 (100Ω) is connected in parallel to the resistor R26 (330Ω) which serves to reduce the voltage when 12V is employed. This connection produces a total of approximately 77Ω. In the case the resistors serve also as noise suppressors. R24 (470Ω) (the voltage stabilizing resistor necessary with 12V) must be cut off. Base bias of the power amplification is applied by R28 (120Ω) and R29 (50Ω), which are connected in parallel. This connection produces the total of 35Ω, and voltage of approximately 1.3V is applied to the base. Emitter resistance becomes 1Ω as R32 (2Ω) and R33 (2Ω) are connected in parallel.

Voltage between the base and emitter becomes greater by 0.2V as compared with the voltage when 12V is employed. The collector current becomes 1000mA.

Colletor output is supplied to 5.5Ω terminal of the output transformer.

(Refer to Fig. 5-2)

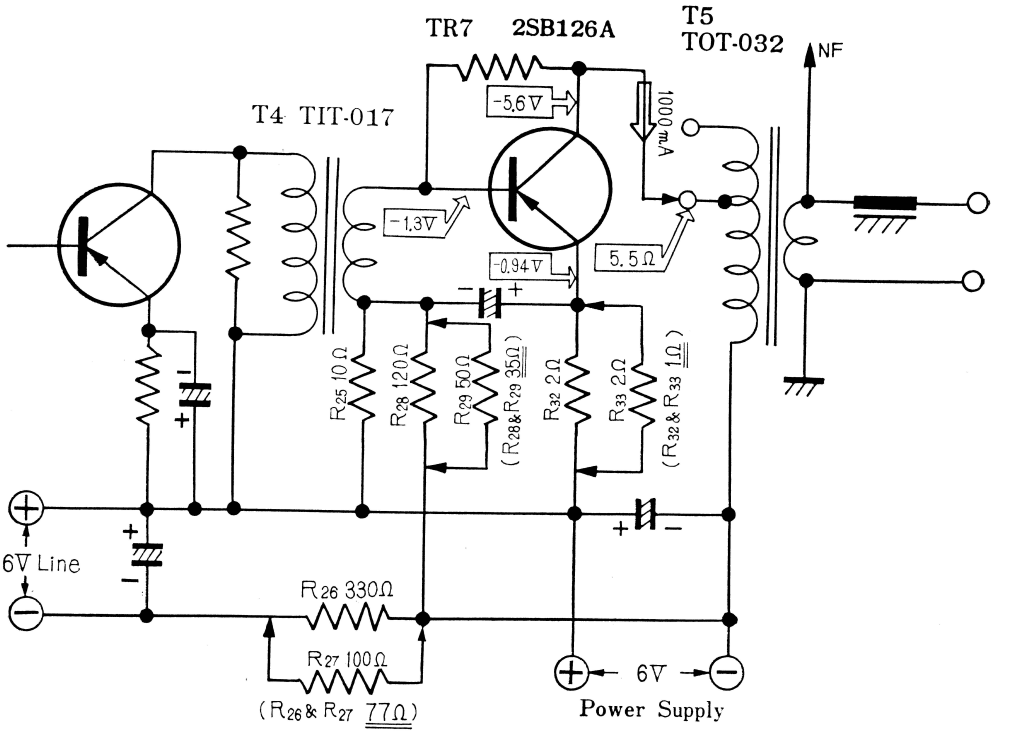

Fig. 5-2

6. ALIGNMENT

1. Preparations for Alignment

1) Power voltage:
   13.2V or 6.6V (Be sure to set the voltage conversion switch at correct position.)

2) Volume:
   Set the sound volume control at maximum, and tone control at its highest.

3) Signal generator output:
   Modulation frequency 400c/s percentage modulation 30 %

4) Signal supply inlet:
   Antenna receptacl.

5) Dummy antenna.
   Refer to Fig. 6−3

ADJUSTMENT STEP	COMPONENT TO BE ADJSTED		SIGNAL FREQUENCY	DIAL SETTING	REMARKS
1.	I F T	IFMI (black)	455kc	Around 1500kc where there is no station.	Repeat the adjustment step No. 1 to 4 three or four times so as to get maximum output.
2.		T3 (white)	〃		
3.		T2 (blue)	〃		
4.		T1 (pink)	〃		
5.	Oscillator	Core of oscillation coil L4	530kc	Lowest receiving point (left end stop)	Repeat two or three times so as to get proper receiving at the highest & lowest receiving points.
6.		Oscillation trimmer TC3	1650kc	Highest receiving point (right end stop)	
7.	RF, ANT matching	RF trimmer TC2	1400kc	1400Kc	adjust to get the maximum output.
8.		ANT trimmer TC1	〃	〃	

Note: With radio installed in car and antenna fully extended, tune a weak station near 1400kc and adjust TC1 for maximum output.

2. Alignment Point & Signal Frequency

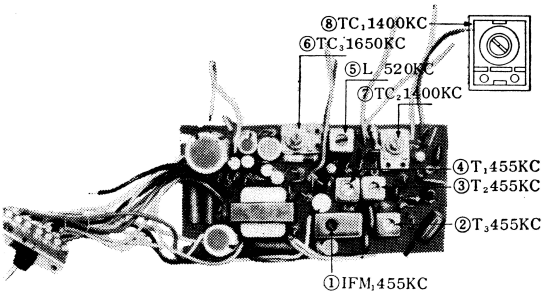

Fig. 6−2

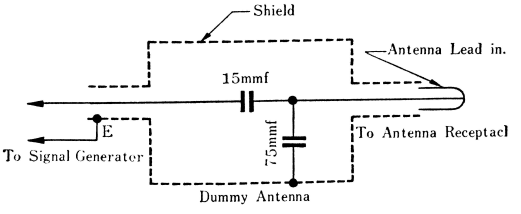

75mmf includes the capacity of the feeder.

Fig. 6−3

CR-1352 CIRCUIT DIAGAM

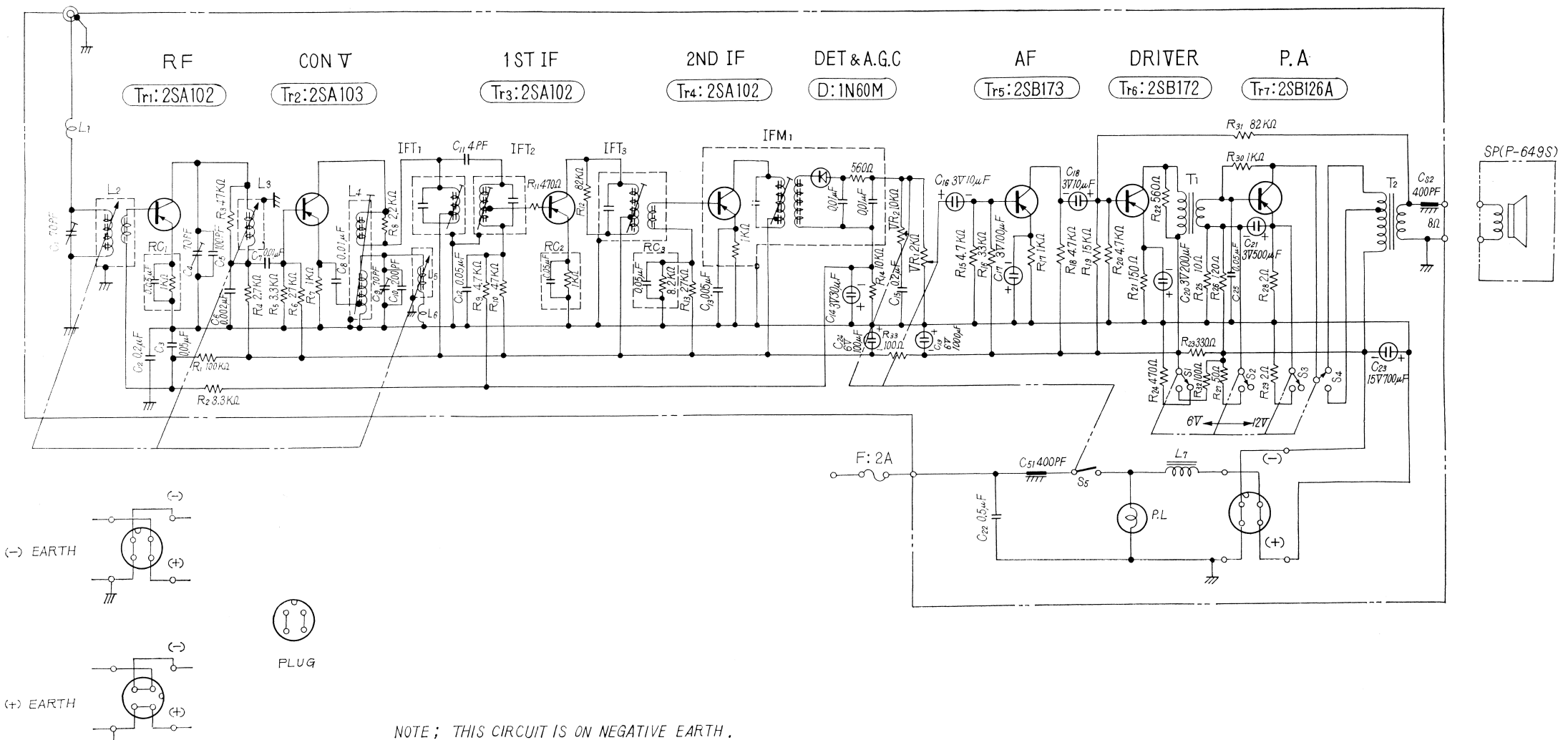

3.

PARTS LIST

Note: Be sure to inculde code number and type number with any orders for replacement parts.
Main parts are marked with +
Exclusive Parts are marked with #

SYMBOL	CODE No.	DESCRIPTION	TYPE NO.
		〔TRANSISTORS〕	
TR1. TR3	015018		2SA102／AA
TR2	015038		2SA103／CB
TR4	015008		2SA102／BA
TR5	015024		2SB173／B
TR6	015014		2SB172／A
TR7	015041		2SB126A
		〔RESISTORS〕	
R1	002221	solid- 100KΩ, ±10%, ½W.	ERC-12BK104
R2. R5	002203	〃 3.3KΩ, ±10%, ½W.	ERC-12BK332
R3. R10	002224	〃 47KΩ, ±10%, ½W.	ERC-12BK473
R4	002251	〃 2.7KΩ, ±10%, ½W.	ERC-12BK272
R6.R13	002246	〃 27KΩ, ±10%, ½W.	ERC-12BK273
R7. R18. R31	002209	〃 1KΩ, ±10%, ½W.	ERC-12BK102
R8	002233	〃 2.2KΩ, ±10%, ½W.	ERC-12BK222
R9. R16. R19. R21	002223	〃 4.7KΩ, ±10%, ½W.	ERC-12BK472
R11. R24	002244	〃 470Ω, ±10%, ½W.	ERC-12BK471
R12. R30	002264	〃 82KΩ, ±10%, ½W.	ERC-12BK823
R14	002204	〃 10KΩ, ±10%, ½W.	ERC-12BK103
R15. R27	002202	〃 100Ω, ±10%, ½W.	ERC-12BK101
R17	002218	〃 33KΩ, ±10%, ½W.	ERC-12BK333
R20	022262	〃 15KΩ, ±10%, ½W.	ERC-12BK153
R22	002236	〃 150Ω, ±10%, ½W.	ERC-12BK151
R23	002220	〃 560Ω, ±10%, ½W.	ERC-12BK561
R25	002207	〃 10Ω, ±10%, ½W.	ERC-12BK100
R26	002205	〃 330Ω, ±10%, ½W.	ERC-12BK331
R28	234052	resin coated- 120Ω, ±5%, 4W.	ERM-4PJ121
R29	234057	〃 50Ω, ±5%, 2W.	ERM-2PJ500
R32. R33	234032	〃 2Ω, ±10%, 2W.	ERM-2PK2R0
# VR1. VR2	228027	volume control, with ON-OFF swich	EVF-G83S31 108
		〔CAPACITORS〕	
C1. C13	007011	mylar, 0.2 mf, ±20%, 125V.	MH-05204M
C2. C9. C10. C20	007006	〃 0.05 mf, ±20%, 125V.	MS-05503M
C4	007009	〃 0.002mf ±10%, 125V.	MS-05202K
C5. C6	007010	〃 0.01 mf, ±10%, 125V.	MS-05103K
C3	010067	titanium, 100mmf, ±10%.	CC30 100PF
C7	010082	〃 200mmf, ±10%.	CC30 200PF
C8	010097	〃 4mmf, ±0.25mmf.	UI14 040C
C11	008195	electrolytic, 30mf, 3V.	ECE-A3V30
C12	008186	〃 100mf, 6V.	ECE-A6V100
C14	008200	〃 1000mf, 6V.	ECE-A6V1000
C15. C17	008192	〃 10mf, 3V.	ECE-A3V10
C16	008193	〃 100mf, 3V.	ECE-A3V100
C18	008197	〃 200mf, 3V.	ECE-A3V200
C19	008196	〃 500mf, 3V.	ECE-A3V500
C22	008203	〃 700mf, 15V.	ECE-A15VD350
C23	006052	MP tubulal, 0.5mf, 150V.	ECH-R1504M

SYMBOL	CODE No.	DESCRIPTION	TYPE NO.
C21-1 & 2	203002	spark plate, 400mmf×2.	SP-6C-401×2
TC1	003066	trimmer- 70mmf.	TM-70
TC2. TC3	003062	〃 70mmf.	TT-70
CR1. CR2	231002	composite parts- 0.05mf & 1KΩ.	RC11010KYZ
CR3	231003	〃 0.05mf & 8.2KΩ.	RC11018KYZ
		〔COILS〕	
L1	224054	loading coil- 8 Microhenries.	Lo-004
# L2. L3. L5	230317	tuner. (assembly)	AT-17
L4	227004	oscillator coil.	OSC-006
L6	227052	oscillator coil- (series coil)	OSC-011
		〔TRANSFORMERS〕	
T1	225018	1st I. F. transformer.	22001
T2	225019	2nd I. F. transformer.	22002
T3	225009	3rd I. F. transformer.	IFT-004
+ IFM1 (TR4. D1)	225023	4th I. F. module.	IFM-002
T4	223018	input transformer- PRI. 1.2KΩ SEC. 10Ω	TIT-017
# T5	222030	output transformer- PRI. 5.5Ω & 30Ω. SEC. 8Ω	TOT-032
CH1	224013	chork transformer- 1.2MH.	TCH-012
SP	235015	Speaker-160mm (6½") PM. speaker 6W, 8Ωvoice coil	P-649S
#	291079	Printed circuit board.	P-352B
	291057	〃	P-351D
F	018004	Fuse.	2A
PL	017008	Lamp. 12V, 3W	G11-8269-1330
KNOB	251071	Knob-CR-1352 Knob inner.	
KNOB	251070	Knob-CR-1352 Knob outer.	
	244059	Dial plate	
		Indicator needle.	
# S1-S4	233023	Voltage conversion switch.	8SSL12-4-2
	229045	Polarity conversion socket.	4PGRA
	229020	Polarity conversion plug.	4PGP
	229046	Lead type antenna receptacl.	001

CR-1352 PRINTED CIRCUIT BOARD

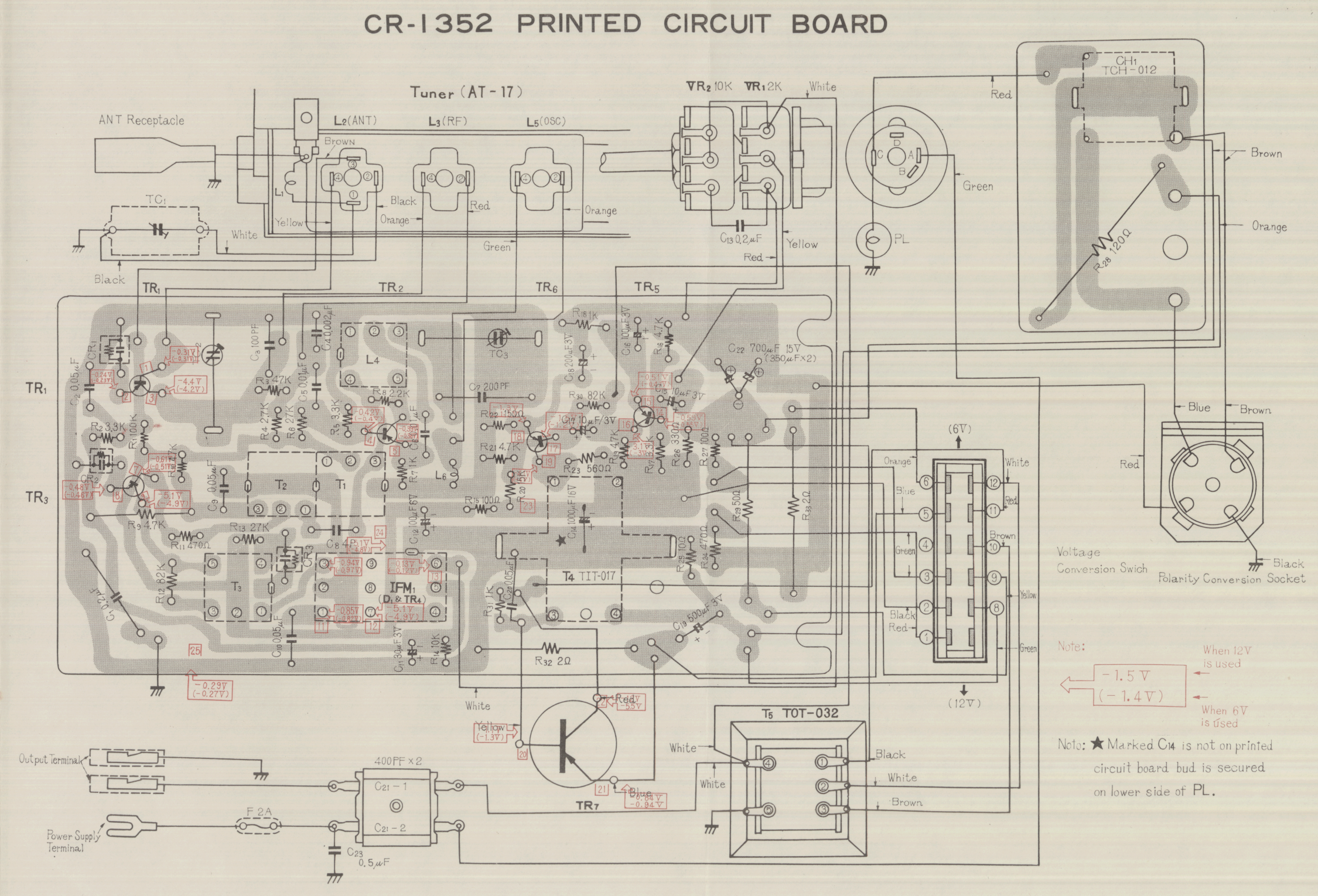

CR-1352 PRINTED CIRCUIT BOARD